GROUND PLAN (1:30)

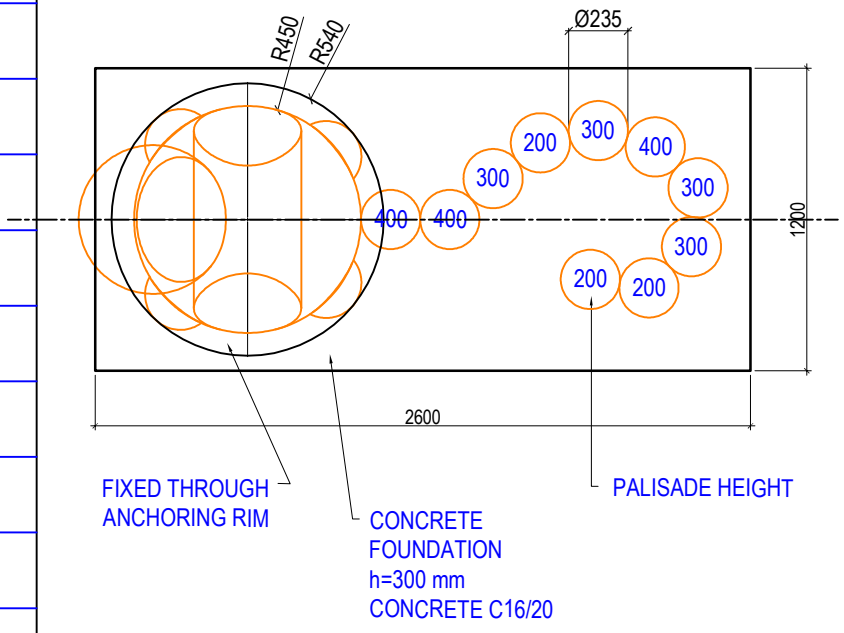

PALISADE ANCHORING (1:15)

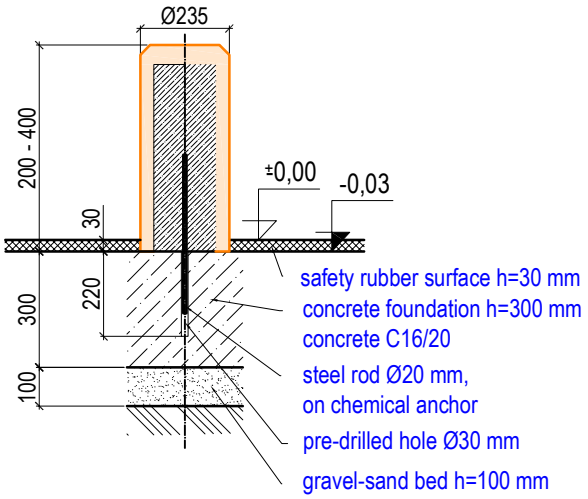

ANCHORING DETAIL (1:6)

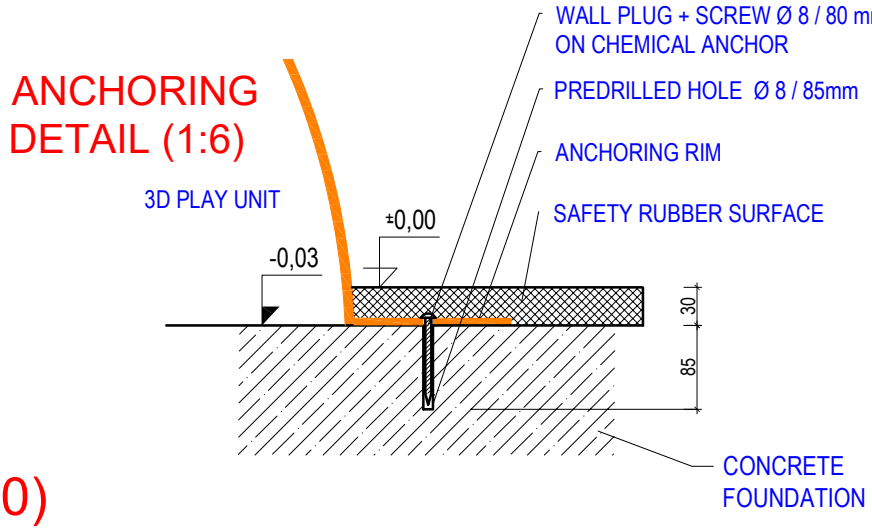

SECTION (1:30)

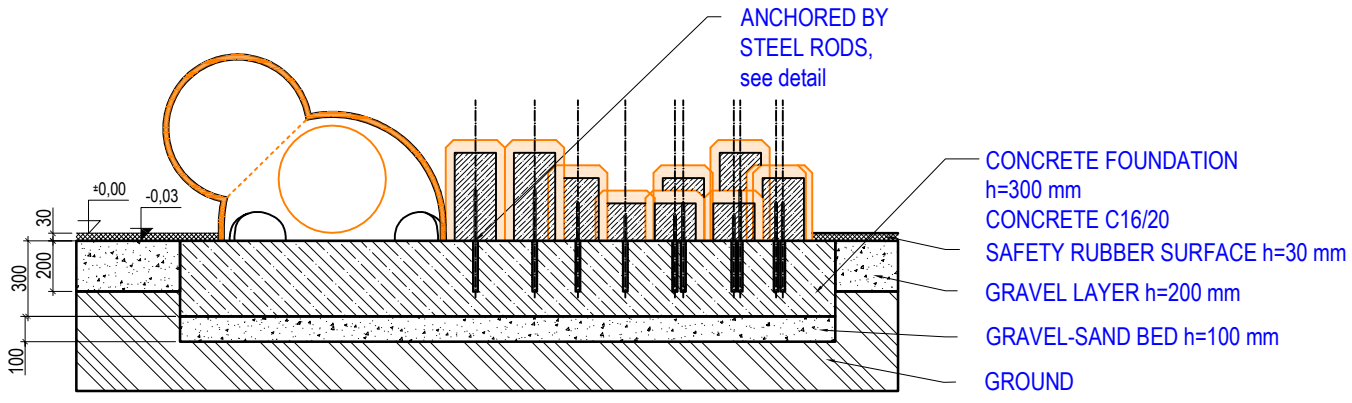

Author:		3D PROGRAM, s.r.o. Objízdná 1911 765 02 Otrokovice, Czech Republic Tel: 602 500 045 Email: info@3dprogram.eu	
Daniel Naď			
TECHNICAL DRAWING		Certified according to	EN71 , EN1176
		Date of issue	12.12.2025
M20 - MINI CHAMELEON M20t - MINI CHAMELEON WITH TUBE		M 1:30, 1:15, 1:6	format 1xA4
Foundation and anchoring - ground plan and section		M20_EN.dwg	revision 0